P/N: P-16.200.0

AC/DC Split Core Current Transducer Model AT 30

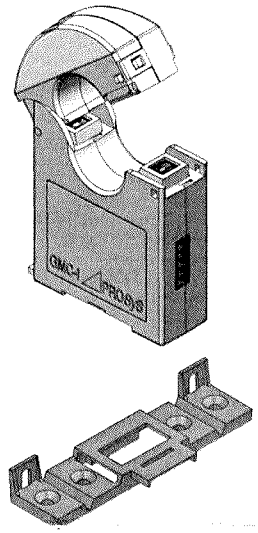

The AT 30 split core current transducer uses **closed loop Hall Effect** technology for accurate measurement of both DC and AC current. The unique snap closed design allows easy connection around conductors making it ideal for retrofitting.

Electrical Characteristics

Measuring Range	: 30A DC or AC_{PEAK}
Overload Capacity	: 500A
Output Sensitivity	: 100mV/A
Output Zero Offset	: ± 10mV
DC Accuracy[1] (at +25°C)	: ± 1% of reading ± 5mA
Linearity	: ± 0.2%
Resolution	: ± 1mA
di/dt Response	: 20A / µs
Response time	: better than 1µs
Load Impedance	: > 50kΩ
Frequency Range [1]	: DC to 100kHz (-3 dB)
Temperature Coefficient	: ± 0.02% of reading per °C
Zero Drift	: ± 1mV / °C typical
Power Supply	: 12V ± 5%, external
Current Consumption	: 25mA + 1mA/A measured
External Field Rejection (at 50 A DC)	: 500 : 1
Working Voltage (see Safety Standards Section)	: 300V AC_{RMS} or DC

General Characteristics

Maximum Conductor Size	: 25mm diameter
Output Connection	: via 5 pin connector,
	: Phoenix Contact MC 1,5/5-G-3,81
Output Zero	: External zero correction
Operating Temperature Range	: -20 to +65 °C
Storage Temperature Range	: -20 to +85 °C
Ingress Protection	: IP40
Safety Standards	: BS EN 61010-1:2010
	: BS EN 61010-2-032:2012
Voltage Rating	: 300V
Installation Category	: CAT III, Pollution degree 2
EMC Standard	: BS EN 61326-1:2013
Protection against mechanical impact (IEC 62262)	: IK06

Note: [1] Conductor positioned at the centre of the aperture

AT 30_150630_04

GMC-I PROSyS Ltd.
Allied Business Centre | 1 Potter Place | Skelmersdale | Lancashire | WN8 9PH | United Kingdom
Telephone: +44 (0) 1695 567280 | Fax: +44 (0) 1695 567299
www.i-prosys.com | sales@i-prosys.com

Registered Company Number: 5116760
Vat Number: GB863880193

Safety

The following symbols appear on the product:

Do not dispose of this product as unsorted municipal waste. Contact a qualified recycler for disposal.

Double/Reinforced Insulation

Complies with the relevant European standards

Caution read all instructions completely before using this product

Do not apply around or remove from UNINSULATED HAZARDOUS LIVE conductors, which may cause electric shock, electric burn, or arc flash

Caution risk of danger read all instructions completely before using this product:

- This product must be installed and commissioned only by qualified personnel practising applicable safety precautions.
- Always de-energise circuit under test before this product is installed or maintained.
- The applicable national standards and regulations must be adhered to during the installation, maintenance and operation of this product.
- This product is intended to be used in a fixed installation, all conducting parts must be inaccessible after installation.
- Use caution during installation of this product; high voltages and currents may be present in parts of the module (e.g. power supply, primary conductor, output connections).
- Installation and maintenance should be carried out with the power supply disconnected.
- Always inspect the unit and connecting cable for damage before using this product, do not use if damaged.
- Product jaw MUST be closed before product is put into operation
- The product may be cleaned using a cloth dampened with Isopropyl alcohol, ensure the product is totally dry before use.
- There are no user serviceable parts on this product, it must be returned to supplier or manufacture for service.
- If the product is used in a manner not specified by the manufacturer the protection provided by the product may be impaired.

Dimensions and Connection Details

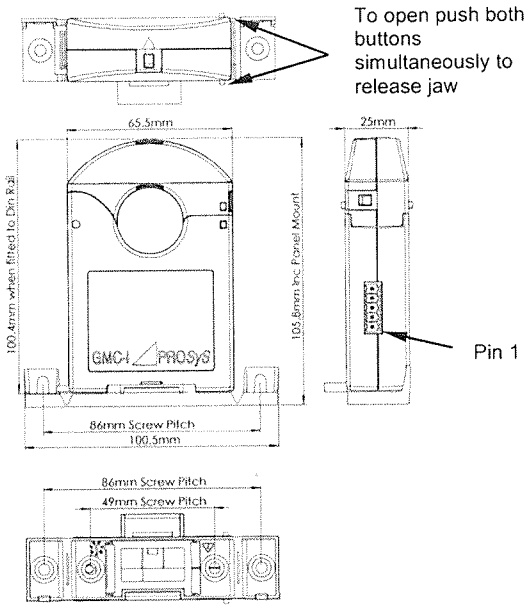

PIN No	Function
1	+ 12 V
2	NC
3	0 V
4	Output +
5	Output –

AT 30_150630_04

GMC-I PROSyS Ltd.
Allied Business Centre | 1 Potter Place | Skelmersdale | Lancashire | WN8 9PH | United Kingdom
Telephone: +44 (0) 1695 567280 | Fax: +44 (0) 1695 567299
www.i-prosys.com | sales@i-prosys.com

Registered Company Number: 5116760
Vat Number: GB863880193

AT and ATi

Split Core AC / DC Current Transducers

Quick Start

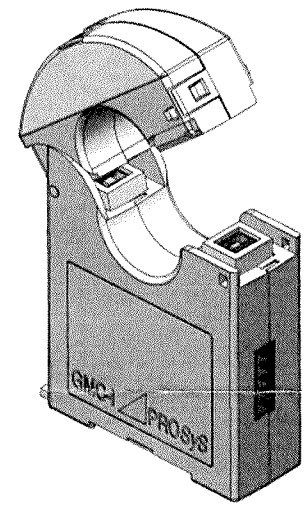

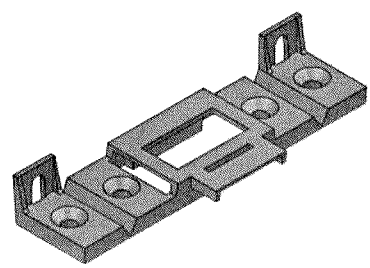

EN

Refer to documentation:

Do not apply around or remove from UNINSULATED HAZARDOUS LIVE conductors, which may cause electric shock, electric burn, or arc flash

- This product must be installed and commissioned only by qualified personnel using applicable safety precautions.
- Always de-energise circuit under test before this product is installed or maintained.
- The applicable national standards and regulations must be adhered to during the installation, maintenance and operation of this product.
- This product is intended to be used in a fixed installation, all conducting parts must be inaccessible after installation.
- Use caution during installation of this product; high voltages and currents may be present in parts of the module (e.g. power supply, primary conductor, output connections).
- Installation and maintenance should be carried out with the power supply disconnected.
- See front label for connection information.
- Always inspect the unit and connecting cable for damage before using this product, do not use if damaged.
- Product jaw MUST be closed before product is put into operation.

DE

Lesen Sie die Bedienungsanleitung:

Das Gerät niemals an UNISOLIERTEN, SPANNUNGSFÜHRENDEN Leitern anbringen oder hiervon entfernen. Hierbei besteht das Risiko von Stromschlägen, elektrischen Verbrennungen oder Spannungsüberschlägen.

- Das Produkt darf nur durch qualifiziertes Personal unter Einhaltung aller relevanten Sicherheitsvorkehrungen installiert und in Betrieb genommen werden.
- Schalten Sie den zu prüfenden Stromkreis grundsätzlich frei, bevor Sie das Produkt installieren oder warten.
- Installation, Wartung und Betrieb des Produkts unterliegen den geltenden nationalen Normen und Vorschriften.
- Das Produkt ist für die permanente Installation vorgesehen. Nach dem Einbau dürfen die spannungsführenden Teile nicht mehr zugänglich sein.
- Bei der Installation des Produkts ist besondere Vorsicht geboten: In Teilen des Moduls (z. B. Netzteil, Primärleiter, Ausgangsanschlüsse) können hohe Spannungen und Ströme anliegen.
- Trennen Sie vor Einbau und Wartung grundsätzlich die Stromversorgung.
- Anschlussdaten siehe Etikett auf der Vorderseite.
- Prüfen Sie das Gerät und das Anschlusskabel vor jeder Verwendung auf Schäden. Wenn Sie eine Beschädigung feststellen, darf das Produkt nicht verwendet werden.
- Vor Inbetriebnahme des Produkts MUSS die Zange geschlossen sein.

FR

Se référer à la documentation:

Ne pas appliquer à proximité, ni retirer de conducteurs NON ISOLÉS SOUS TENSION DANGEREUSE, susceptibles de causer une électrocution, des brûlures électriques ou un arc électrique

- Seul un personnel qualifié appliquant les consignes de sécurité appropriées doit installer et mettre ce produit en service
- Avant d'installer ce produit ou d'effectuer toute intervention sur ce produit, il faut toujours mettre le circuit à l'essai hors tension.
- Il faut respecter les normes et les règlements nationaux applicables durant l'installation, l'entretien et le fonctionnement de ce produit.
- Ce produit est conçu pour être utilisé dans une installation fixe ; après l'installation, toutes les pièces conductrices doivent être inaccessibles.
- Agir avec prudence pendant l'installation de ce produit. De hautes tensions et des courants élevés risquent d'être présents dans certaines parties du module (par ex. l'alimentation électrique, le conducteur primaire, les connexions de sortie).
- Pour effectuer l'installation et l'entretien, il faut que l'alimentation électrique soit coupée.
- Pour des renseignements sur les connexions, voir l'étiquette frontale.
- Avant d'utiliser ce produit, toujours inspecter l'unité et le câble de raccordement afin de repérer toutes détériorations. Ne pas l'utiliser s'il est endommagé.
- Il est IMPÉRATIF que la mâchoire du produit soit fermée avant de le faire fonctionner.

IT

Fare riferimento alla documentazione:

Non applicare intorno o rimuovere da conduttori PERICOLOSI, NON ISOLATI E SOTTO TENSIONE, che possono causare scosse elettriche, ustioni elettriche o arco elettrico

- Questo prodotto deve essere installato messo in servizio solo da personale qualificato utilizzando le misure di sicurezza applicabili.
- Diseccitare sempre il circuito testato prima di installare o sottoporre a manutenzione questo prodotto.
- Gli standard e i regolamenti nazionali applicabili devono essere rispettati durante l'installazione, la manutenzione e l'uso di questo prodotto.
- Questo prodotto è destinato all'uso in un impianto fisso; tutte le parti conduttrici non devono essere accessibili dopo l'installazione.
- Prestare attenzione durante l'installazione del prodotto; tensioni e correnti elevate possono essere presenti in parti del modulo (per esempio, alimentazione, conduttore primario, collegamenti di uscita).
- L'installazione e la manutenzione devono essere eseguite con l'alimentazione scollegata.
- Vedere l'etichetta anteriore per informazioni sui collegamenti.
- Ispezionare sempre l'unità e il cavo di collegamento per danni prima di utilizzare questo prodotto; non utilizzare, se danneggiato.
- Le ganasce del prodotto DEVONO essere chiuse prima che il prodotto sia utilizzato.

ES

Remitirse a la documentación:

No retirar ni aplicar alrededor de conductores CON CORRIENTE PELIGROSOS SIN AISLAMIENTO, que pueden causar sacudidas eléctricas, quemaduras eléctricas o arco eléctrico.

- Este producto solo debe ser instalado y puesto en servicio por personal cualificado siguiendo las precauciones de seguridad pertinentes.
- Desenergizar siempre el circuito bajo prueba antes de proceder a la instalación o el mantenimiento de este producto.
- Deben cumplirse las normas y reglamentos nacionales pertinentes durante la instalación, mantenimiento y funcionamiento de este producto.
- Este producto está destinado para utilizarse en instalaciones fijas: todas las piezas conductoras han de quedar inaccesibles tras la instalación.
- Téngase precaución durante la instalación de este producto ya que podría haber altas tensiones o corrientes presentes en los componentes del módulo (fuente de alimentación, conductor primario, conexiones de salida, etc.).
- La instalación y el mantenimiento deben llevarse a cabo con la fuente de alimentación desconectada.
- Véase la etiqueta frontal para obtener la información sobre la conexión.
- Inspeccionar siempre la unidad y el cable de conexión para comprobar si están dañados antes de utilizar este producto, no utilizar si están dañados.
- La mordaza del producto DEBE estar cerrada antes de poner en funcionamiento el producto.

GMC-I PROSyS Ltd.
Allied Business Centre | 1 Potter Place | Skelmersdale | Lancashire | WN8 9PH | United Kingdom
Telephone: +44 (0) 1695 567280 | Fax: +44 (0) 1695 567299
www.i-prosys.com | sales@i-prosys.com

Registered Company Number: 5116760
Vat Number: GB863880193

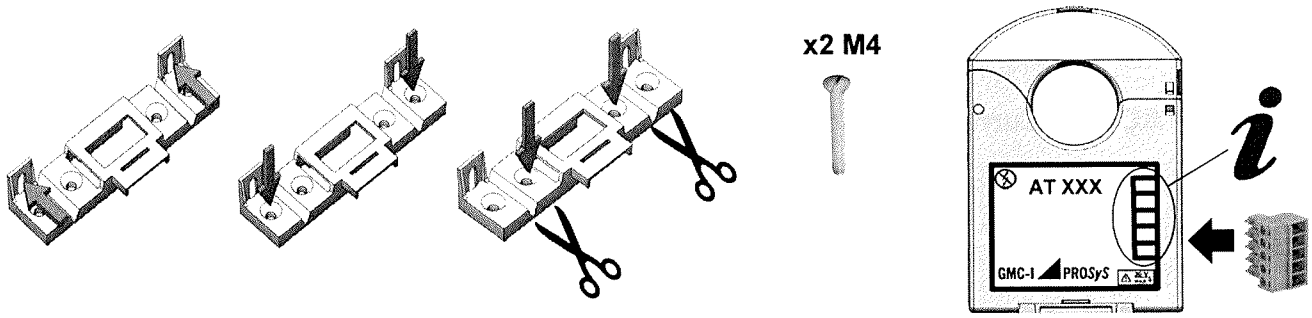

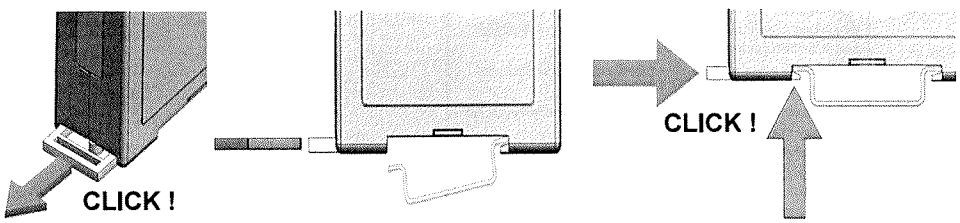

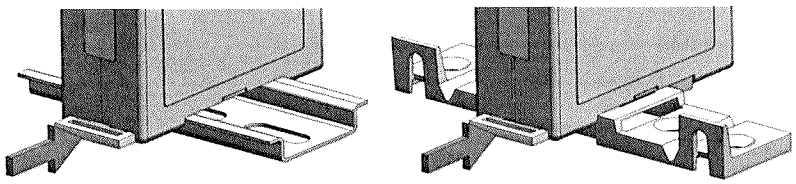

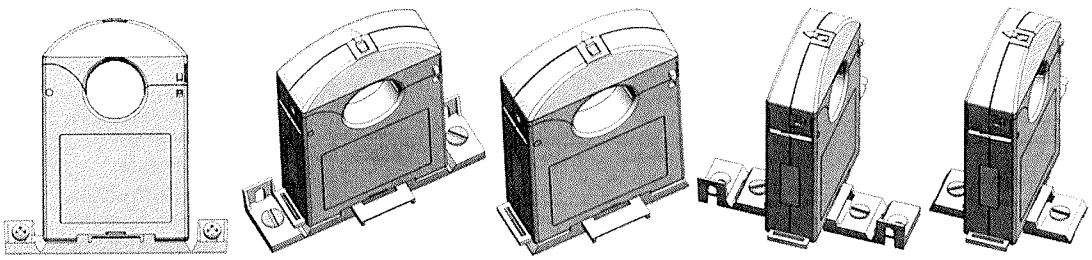

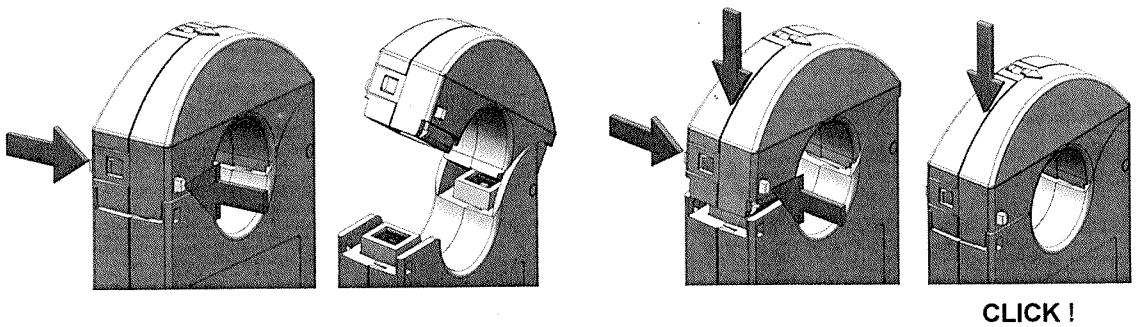

GMC-I PROSyS Ltd.
Allied Business Centre | 1 Potter Place | Skelmersdale | Lancashire | WN8 9PH | United Kingdom
Telephone: +44 (0) 1695 567280 | Fax: +44 (0) 1695 567299
www.i-prosys.com | sales@i-prosys.com

Registered Company Number: 5116760
Vat Number: GB863880193